Roll carrier 2-axle turntable

Produktvorteile und Optionals

- Robust, payload-optimised trailer for transporting roller containers in accordance with DIN 30722
- "Made in Germany"
- Smooth container transport thanks to continuous longitudinal beam design
- Low-wear rolling surface with rounded centring edge offer safety and uniform elegant appearance
- Load securing with low-noise and pneumatic 4-point container locking mechanism
- Immobiliser blocks the brakes when the container locking mechanism is open
- Individual trailer configuration
- OPTIONALS: Hüffermann elegance edition
- OPTIONALS: Loading from the front or both sides
- OPTIONALS: Closed floor

Fahrzeugdetails

TYPE DESIGNATION

ROLL CARRIER 2-AXLE TURNTABLE

Twin tyres HAR

Single tyres HAR

Various length versions

Front loading version

Version for transporting swap compactors

Versions for different international roller container standards

WEIGHTS

Total weight (techn./perm.): from 18 t – 20 t, depending on the national approval regulations

Weight-optimised versions with empty weight starting at 3100 kg

Additional or reduced weight depending on the equipment.

DIMENSIONS

Roller container lengths of 4500 mm – 7300 mm inner length

Total lengths depending on the type design and drawbar selection

FRAME

Functionally shaped, self-supporting longitudinal girder construction for smooth container transport. The roll carrier has a patented profile shape of the continuous longitudinal girder lower belts and of the low-wear rolling surface tread. Moreover, it

has a ramp and insertion funnels for easier loading of the containers.

When transporting shorter containers, swivelling stops ensure that the container is always positioned in the payload centre of gravity.

CHASSIS

We only use axles from renowned manufacturers. Air suspension chassis with disc brakes or drum brakes, including automatic lowering function

Tyres

8 tyres 235/75R 17.5 (10 t axles)

8 tyres 265/70R 19.5 (10 t axles)

4 tyres 385/55R 22.5 (9 t axles)

Other tyre sizes upon request.

Optional: Spare wheel, aluminium rims 19.5 / 22.5, tyre pressure monitoring and control systems, manual lifting/lowering function

BRAKE SYSTEM

- WABCO brake system with ABS and EBS
- Knorr brake system with ABS and RSP as an option

Optional:

- Brake pad wear display
- Rear area monitoring (Wabco)

ELECTRICAL EQUIPMENT

Hella module lighting device with function lights with partially LED technology, including LED position light, LED outline marker lights at the rear and LED side marker

lights, flashing.

Optional:

- LED work lights
- 2 additional LED reversing lights at the rear
- Three round LED tail lights, instead of the module lights
- Additional brake light on the centre panel
- Various warning and surrounding lights
- Independent "PS-Fix" parking light system

PAINTWORK

Paintwork in one RAL colour according to the customer’s wishes (except metallic colours), skids and load securing elements in RAL 1003 signal yellow as standard.

Automatic blasting:

Before the paintwork, the trailer chassis are blasted in the automatic blasting machine specially designed for our trailer types, based on 12 consistently strong, automated and ring-shaped blast wheel turbines. Thanks to the special Hüffermann blasting abrasive, this results in a more homogeneous blasting pattern. Within the scope of the control process, additional blasting is performed manually, depending on the chassis design.

Priming: Application of an epoxy resin-based primer without electrostatics. Also for long-term and resilient corrosion protection.

Top coat: The 2-component top coat with a high solid content is individually applied in the desired colour (RAL) with the electrostatic method. As a result, even the smallest cracks are covered with paint and the protection and look is preserved over the years.

Sealing: After the assembly and the final approval of the vehicle from Quality Assurance, the vehicle is preserved at material contact points and transitions. Preservation is accomplished with Dinitrol cavity wax.

Standard version without paintwork on the side collision protection, silver rims. Axles with black CDP coating. Add-on parts are galvanised.

Optional: Arc galvanising

Zinc wire is melted by an arc, atomised with compressed air and applied onto the freshly blasted surface of the chassis (without add-on parts). Together with the subsequent paintwork, this achieves corrosion protection with similar properties as hot-dip galvanising. Another advantage is the low heat input. This ensures that the structure of high-strength steels is not modified and large areas do not tend to warp.

Electrical arc galvanising offers a clear advantage in terms of the duration of protection, hardness, bonding strength, abrasion resistance, stone chipping resistance and edge protection.

ACCESSORIES

Rear marking

- ECE sign

Optional: Waste, parking or ADR signs

- Wheel chocks (2)

Optional storage areas:

- Standard storage box 600 x 500 x 500 mm
- Stainless steel storage box
- Storage area for nets in different sizes
- Pallet storage compartments

DRAWGEAR

Turntable with sealed ball race and V-drawbar with 40 mm drawbar eye. Optional: Centre pillar drawbar or drawbar with adjustable length, different drawbar eye versions. On front loading trailers, a drawbar lowering device with air bellows control via a pneumatic valve outside of the hazard area. Field-tested lever arrangement, plus generously dimensioned lifting bellows for lifting and lowering the drawbar with low supply pressure. Lowering without ground contact (of the drawbar).

LOAD SECURING

Two pairs of locking elements secure the roller container on the inside of the lower belt. Thanks to an eccentric effect, even slightly bent container belts are tightened with a tension force of approx. 2500 kg per element. It is operated with air valves on the left side of the trailer.

ADD-ON PARTS

Underride guard in accordance with 70/221/EEC, galvanised, with vertical rubber buffer

Impressionen

OPTIONAL: 3 LED Rundleuchten

OPTIONAL: Absenkbare Zugdeichsel für Frontbeladung

OPTIONAL: Das autarke Beleuchtungssystem für mehr Sicherheit

OPTIONAL: Beidseitig beladbar

OPTIONAL: elegance edition

OPTIONAL: Sonderlackierung

Roll-Carrier flexibel einsetzbar mit kurzem Behälter

Sonderausführung für City Behälter zGG 12t

Sonderausführung Laufbahnverbreiterung Innen- und Außenzentrierung
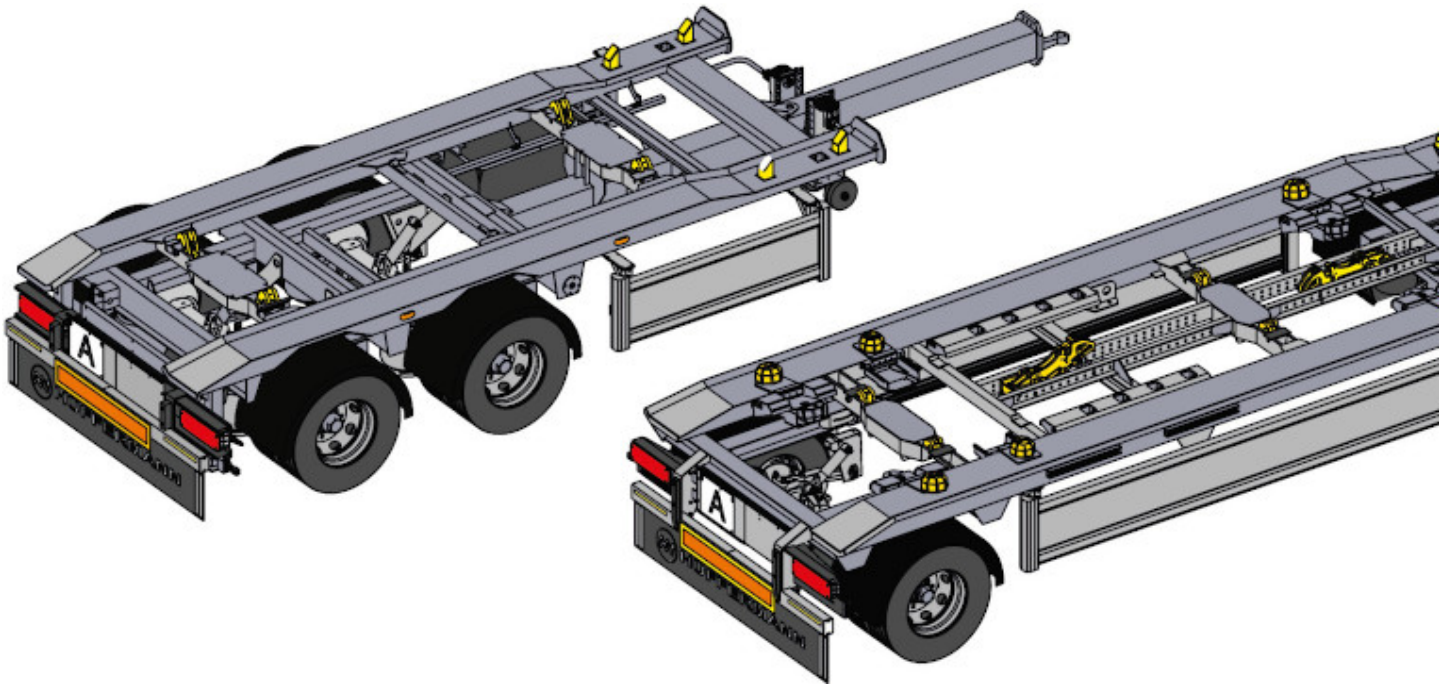
HÜFFERMANN
Transportsysteme